Linear Motion Systems with Ball Screw Drive and Slide Guide

Overview

Movopart M

M75

Features

- Can be installed in any orientation
- Self-adjusting stainless steel cover band
- Patented internal self-adjusting prism slide guides
- Wash down protected versions available.

Parameter		M55	M75	M100
Profile size (width × height)	[mm]	58 × 55	86 × 75	108 × 100
Stroke length (Smax), maximum	[mm]	2712	3772	5578
Linear speed, maximum	[m/s]	1,0	1,6	1,6
Dynamic carriage load (Fz), maximum	[N]	400	1485	3005
Remarks		single ball nut	single ball nut	single ball nut
Page		70	72	74

Linear Motion Systems with Ball Screw Drive and Slide Guide

Overview

M-Series Technical Presentation

Cover band
The self-adjusting magnetically sealed stainless steel cover band protects the unit from the penetration of dirt, dust and liquids.

Environmental protection
The standard unit can operate in harsh environments but is also available in a wash down version for environments that are dusty, dirty and/or wet.

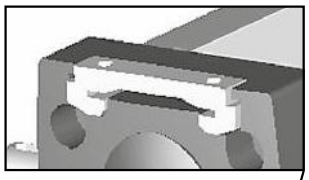

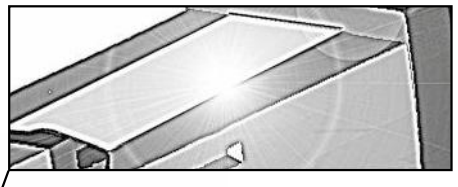

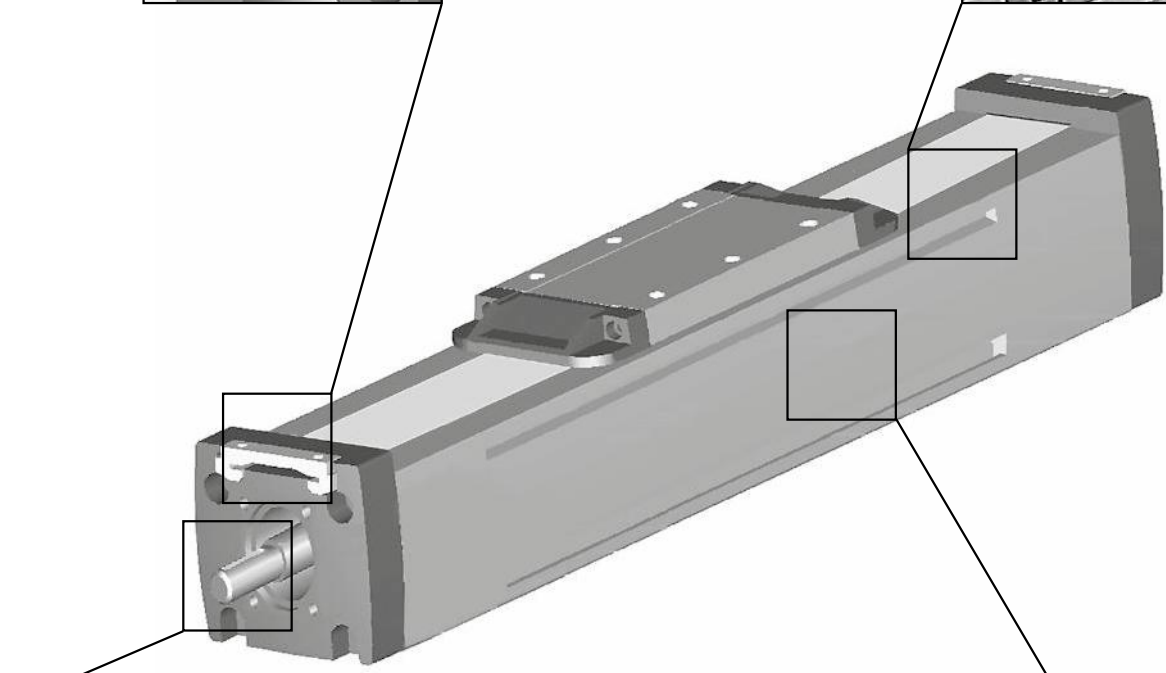

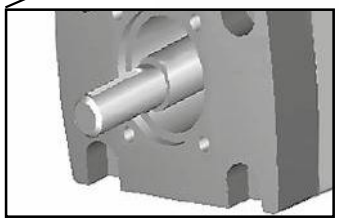

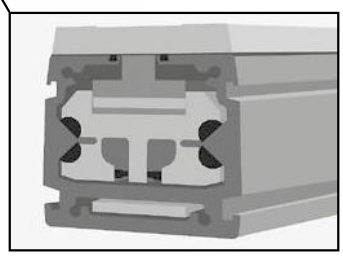

Ball screw drive
The ball screw ensures high accuracy and efficiency and the optional screw supports enable higher speeds.

Prism slide guides
The patented self-aligning prism slide guides are accurate, durable and are resistant to vibrations and shock loads.

Note! the unit is pictured without a RediMount™ flange

M55

Ball Screw Drive, Slide Guide

» Ordering key - see page 201
» Accessories - see page 131
» Additional data - see page 179

General Specifications

Parameter	M55
Profile size (w × h) [mm]	58 × 55
Type of screw	ball screw with single nut
Carriage sealing system	self-adjusting steel cover band
Screw supports	number of screw supports to be specified by customer at order
Lubrication	lubrication of ball screw
Included accessories	none

Performance Specifications

for Units with Single Standard Carriage (A)[1]

Parameter		M55
Stroke length (Smax), maximum	[mm]	2712
Total length (L tot), maximum	[mm]	2975
Linear speed, maximum	[m/s]	1,0
Acceleration, maximum	[m/s²]	8
Repeatability	[± mm]	0,05
Input speed, maximum	[rpm]	3000
Operation temperature limits	[°C]	-20 – 70
Dynamic load (Fx), maximum	[N]	1000
Dynamic load (Fy), maximum	[N]	400
Dynamic load (Fz), maximum	[N]	400
Dynamic load torque (Mx), maximum	[Nm]	9
Dynamic load torque (My), maximum	[Nm]	23
Dynamic load torque (Mz), maximum	[Nm]	23
Drive shaft force (Frd), maximum [2]	[N]	200
Input/drive shaft torque (Mta), maximum	[Nm]	12
Screw diameter (d0)	[mm]	16
Screw lead (p)	[mm]	5, 10, 20
Weight	[kg]	
of unit with zero stroke		3,06
of every 100 mm of stroke		0,44
of carriage		1,20
of option single screw support		0,83
of option double screw supports		1,88

[1] See next page for deviating values of units with other carriage types.
[2] Only relevant for units without RediMount flange.

Carriage Idle Torque (M idle) [Nm]

Input speed [rpm]	Screw lead [mm]		
	p = 5	p = 10	p = 20
500 - no screw supports	0,10	0,15	0,30
500 - with screw supports	0,13	0,27	0,45

M idle = the input torque needed to move the carriage with no load on it.

Deflection of the Profile

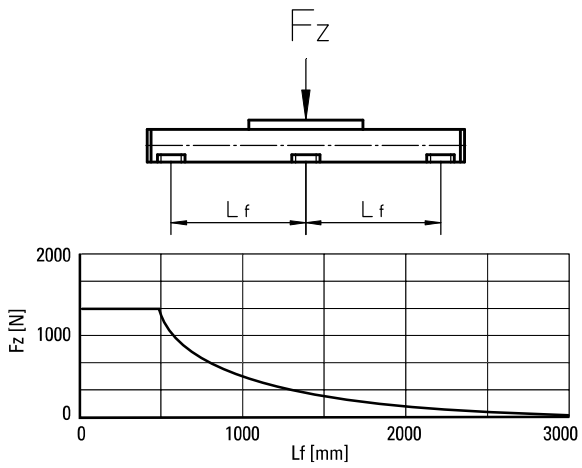

Critical Speed

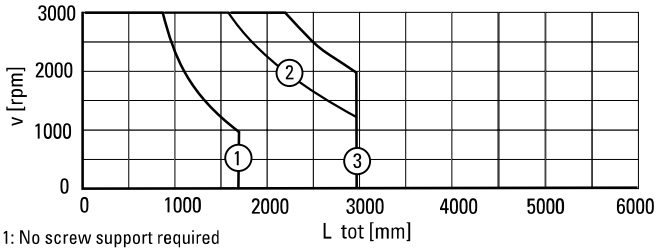

1: No screw support required
2: Single screw support required
3: Double screw supports required

Definition of Forces

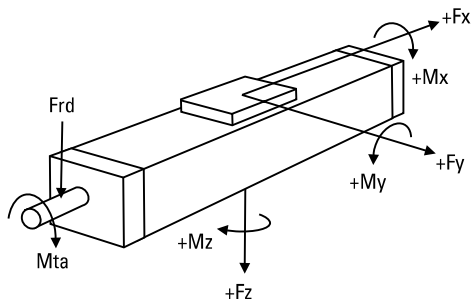

M55

Ball Screw Drive, Slide Guide

Dimensions	Projection	Online Sizing & Selection!
METRIC		www.LinearMotioneering.com

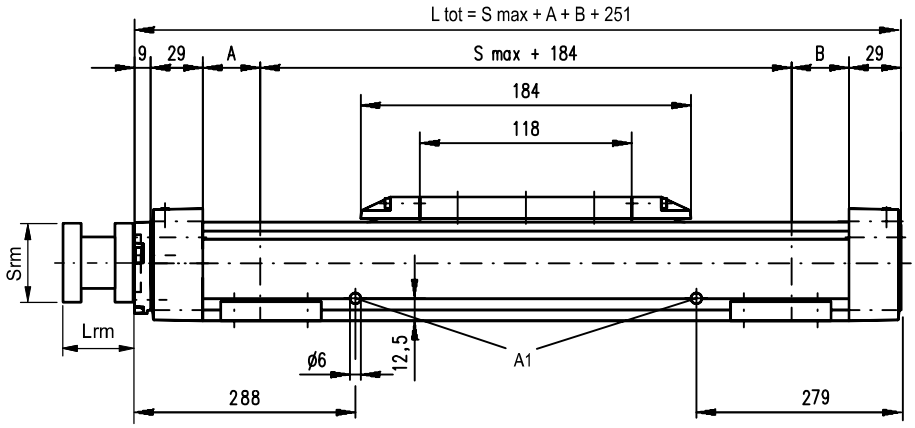

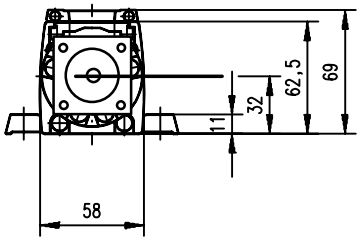

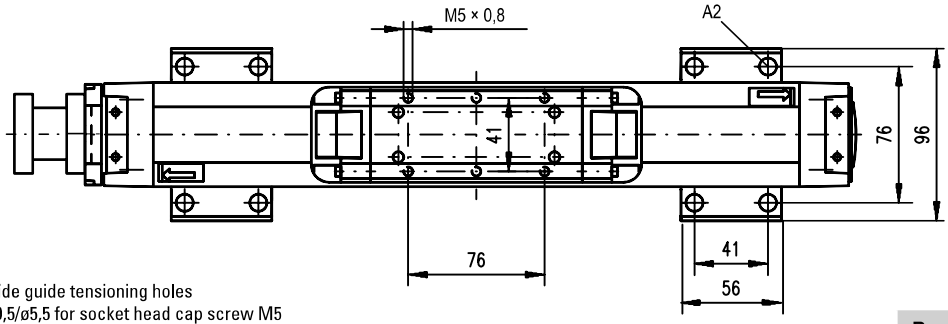

A1: slide guide tensioning holes
A2: ø9,5/ø5,5 for socket head cap screw M5

Screw support configuration	A [mm]	B [mm]	Total length (L tot) [mm]
No screw support	6	6	L tot = Smax + A + B + 251
Single screw support	32	32	L tot = Smax + A + B + 251
Double screw supports	83	83	L tot = Smax + A + B + 251

RediMount Flange Specifications

Parameter		Min	Max
Flange length (Lrm)	[mm]	57	92
Flange square (Srm)	[mm]	60	139
Flange weight *	[kg]	1,84	

* Max. weight including coupling and fastening screws

Performance Specifications

for Units with Double Standard Carriage (C)

Parameter		M55
Stroke length (Smax), maximum	[mm]	2512
Total length (L tot), maximum	[mm]	2975
Minimum distance between carriages (Lc)	[mm]	200
Dynamic load (Fy), maximum	[N]	600
Dynamic load (Fz), maximum	[N]	600
Dynamic load torque (My), maximum	[Nm]	Lc[1] × 0,3
Dynamic load torque (Mz), maximum	[Nm]	Lc[1] × 0,3
Force required to move second carriage	[N]	35
Weight	[kg]	
of unit with zero stroke		5,14
of carriages		2,40

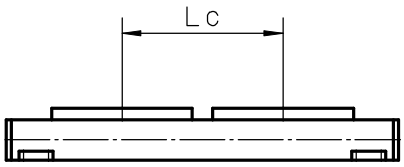

Screw support configuration	A [mm]	B [mm]	Total length (L tot) [mm]
No screw support	6	6	L tot = Smax + A + B + Lc + 251
Single screw support	32	32	L tot = Smax + A + B + Lc + 251
Double screw supports	83	83	L tot = Smax + A + B + Lc + 251

[1] Value in mm

M75

Ball Screw Drive, Slide Guide

» Ordering key - see page 201
» Accessories - see page 131
» Additional data - see page 179

General Specifications

Parameter	M75
Profile size (w × h) [mm]	86 × 75
Type of screw	ball screw with single nut
Carriage sealing system	self-adjusting steel cover band
Screw supports	number of screw supports to be specified by customer at order
Lubrication	lubrication of ball screw
Included accessories	none

Performance Specifications

for Units with Single Standard Carriage (A)[1]

Parameter		M75
Stroke length (Smax), maximum	[mm]	
screw lead 5, 20 mm		3772
screw lead 12,7 mm		2665
Total length (L tot), maximum	[mm]	
screw lead 5, 20 mm		4075
screw lead 12,7 mm		2968
Linear speed, maximum	[m/s]	1,6
Acceleration, maximum	[m/s²]	8
Repeatability	[± mm]	0,05
Input speed, maximum	[rpm]	5000
Operation temperature limits	[°C]	-20 – 70
Dynamic load (Fx), maximum	[N]	2500
Dynamic load (Fy), maximum	[N]	1485
Dynamic load (Fz), maximum	[N]	1485
Dynamic load torque (Mx), maximum	[Nm]	49
Dynamic load torque (My), maximum	[Nm]	85
Dynamic load torque (Mz), maximum	[Nm]	85
Drive shaft force (Frd), maximum [2]	[N]	600
Input/drive shaft torque (Mta), maximum	[Nm]	30
Screw diameter (d0)	[mm]	20
Screw lead (p)	[mm]	5, 12,7, 20
Weight	[kg]	
of unit with zero stroke		6,07
of every 100 mm of stroke		0,82
of carriage		1,70
of option single screw support		1,70
of option double screw supports		3,58

[1] See next page for deviating values of units with other carriage types.
[2] Only relevant for units without RediMount flange.

Carriage Idle Torque (M idle) [Nm]

Input speed [rpm]	Screw lead [mm]		
	p = 5	p = 12,7	p = 20
500 - no screw supports	0,10	0,24	0,37
500 - with screw supports	0,15	0,39	0,57

M idle = the input torque needed to move the carriage with no load on it.

Deflection of the Profile

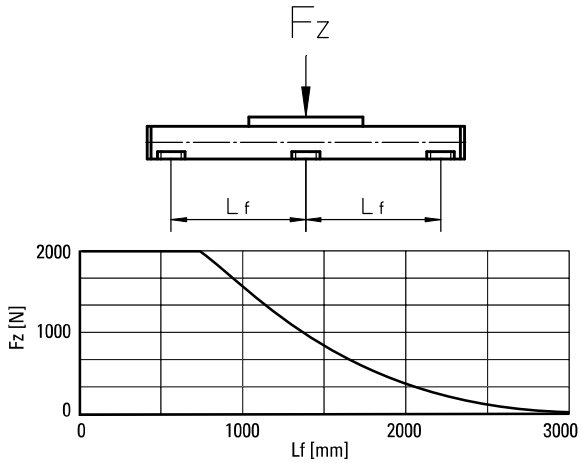

Critical Speed

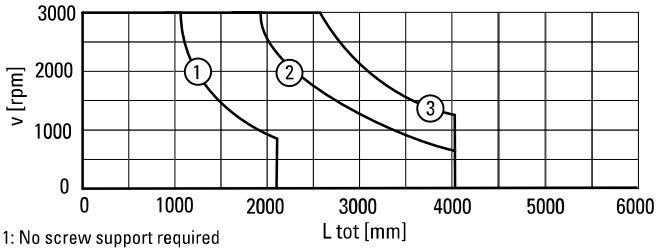

1: No screw support required
2: Single screw support required
3: Double screw supports required

Definition of Forces

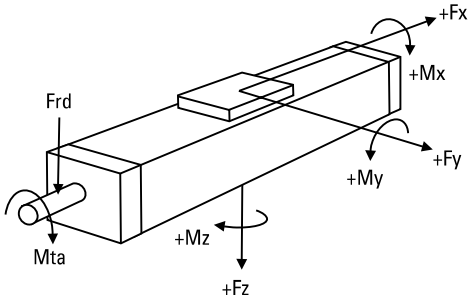

M75

Ball Screw Drive, Slide Guide

Dimensions	Projection	Online Sizing & Selection!
METRIC		www.LinearMotioneering.com

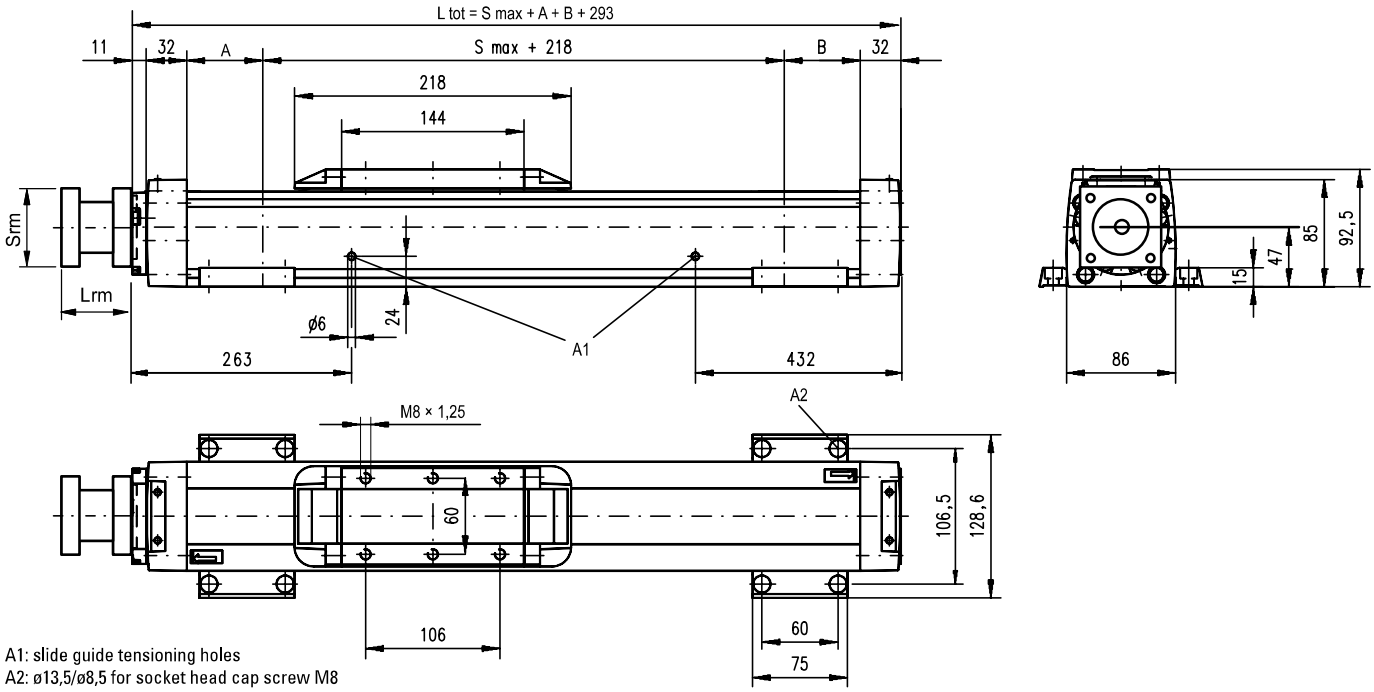

A1: slide guide tensioning holes
A2: ø13,5/ø8,5 for socket head cap screw M8

Screw support configuration	A [mm]	B [mm]	Total length (L tot) [mm]
No screw support	5	5	L tot = Smax + A + B + 293
Single screw support	60	60	L tot = Smax + A + B + 293
Double screw supports	126	126	L tot = Smax + A + B + 293

RediMount Flange Specifications

Parameter		Min	Max
Flange length (Lrm)	[mm]	81	143
Flange square (Srm)	[mm]	90	200
Flange weight *	[kg]	5,60	

* Max. weight including coupling and fastening screws

Performance Specifications

for Units with Double Standard Carriage (C)

Parameter		M75
Stroke length (Smax), maximum screw lead 5, 20 mm screw lead 12,7 mm	[mm]	 3522 2415
Total length (L tot), maximum screw lead 5, 20 mm screw lead 12,7 mm	[mm]	 4075 2968
Minimum distance between carriages (Lc)	[mm]	250
Dynamic load (Fy), maximum	[N]	2227
Dynamic load (Fz), maximum	[N]	2227
Dynamic load torque (My), maximum	[Nm]	Lc[1] × 1,114
Dynamic load torque (Mz), maximum	[Nm]	Lc[1] × 1,114
Force required to move second carriage	[N]	40
Weight of unit with zero stroke of carriages	[kg]	 9,82 3,40

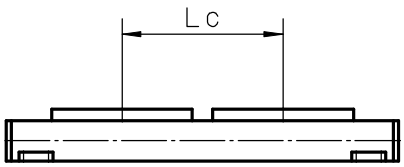

Screw support configuration	A [mm]	B [mm]	Total length (L tot) [mm]
No screw support	5	5	L tot = Smax + A + B + Lc + 293
Single screw support	60	60	L tot = Smax + A + B + Lc + 293
Double screw supports	126	126	L tot = Smax + A + B + Lc + 293

[1] Value in mm

M100

Ball Screw Drive, Slide Guide

» Ordering key - see page 201
» Accessories - see page 131
» Additional data - see page 179

General Specifications

Parameter	M100
Profile size (w × h) [mm]	108 × 100
Type of screw	ball screw with single nut
Carriage sealing system	self-adjusting steel cover band
Screw supports	number of screw supports to be specified by customer at order
Lubrication	lubrication of ball screw
Included accessories	none

Performance Specifications

for Units with Single Standard Carriage (A)[1]

Parameter		M100
Stroke length (Smax), maximum	[mm]	
screw lead 5, 10 mm		5578
screw lead 25 mm		4378
Total length (L tot), maximum	[mm]	
screw lead 5, 10 mm		5974
screw lead 25 mm		4774
Linear speed, maximum	[m/s]	1,6
Acceleration, maximum	[m/s²]	8
Repeatability	[± mm]	0,05
Input speed, maximum	[rpm]	4000
Operation temperature limits	[°C]	-20 – 70
Dynamic load (Fx), maximum	[N]	5000
Dynamic load (Fy), maximum	[N]	3005
Dynamic load (Fz), maximum	[N]	3005
Dynamic load torque (Mx), maximum	[Nm]	117
Dynamic load torque (My), maximum	[Nm]	279
Dynamic load torque (Mz), maximum	[Nm]	279
Drive shaft force (Frd), maximum [2]	[N]	1000
Input/drive shaft torque (Mta), maximum	[Nm]	45
Screw diameter (d0)	[mm]	25
Screw lead (p)	[mm]	5, 10, 25
Weight	[kg]	
of unit with zero stroke		12,87
of every 100 mm of stroke		1,42
of carriage		3,50
of option single screw support		1,86
of option double screw supports		4,42

[1] See next page for deviating values of units with other carriage types.
[2] Only relevant for units without RediMount flange.

Carriage Idle Torque (M idle) [Nm]

Input speed [rpm]	Screw lead [mm]		
	p = 5	p = 10	p = 25
500 - no screw supports	0,15	0,25	0,55
500 - with screw supports	0,25	0,40	0,85

M idle = the input torque needed to move the carriage with no load on it.

Deflection of the Profile

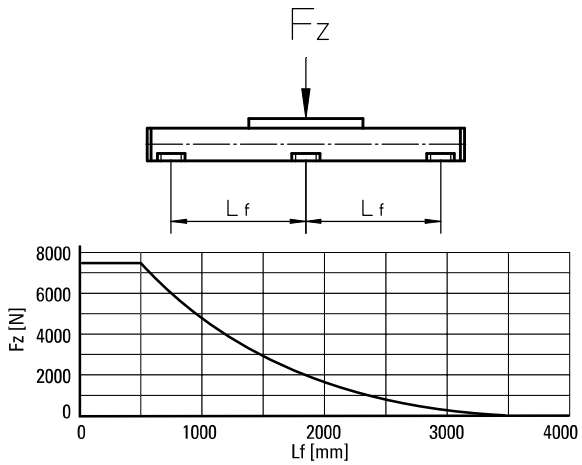

Critical Speed

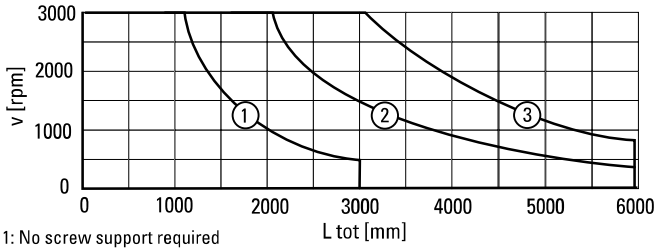

1: No screw support required
2: Single screw support required
3: Double screw supports required

Definition of Forces

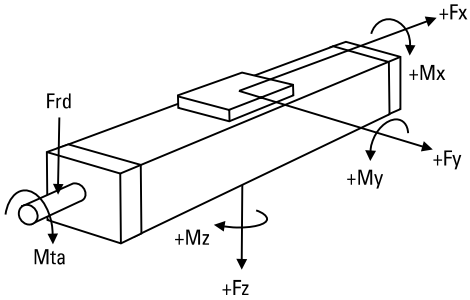

M100

Ball Screw Drive, Slide Guide

Dimensions	Projection	Online Sizing & Selection!
METRIC		www.LinearMotioneering.com

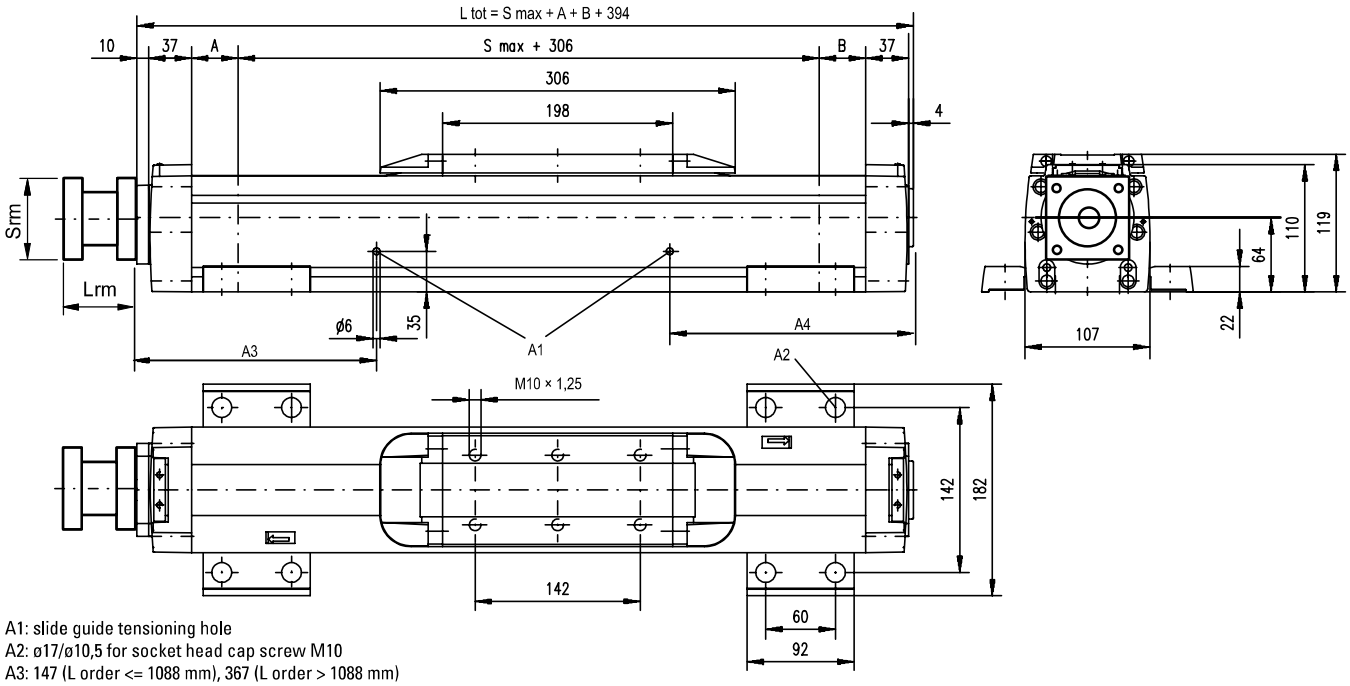

A1: slide guide tensioning hole
A2: ø17/ø10,5 for socket head cap screw M10
A3: 147 (L order <= 1088 mm), 367 (L order > 1088 mm)
A4: 141 (L order <= 1088 mm), 471 (L order > 1088 mm)

Screw support configuration	A [mm]	B [mm]	Total length (L tot) [mm]
No screw support	1	1	L tot = Smax + A + B + 394
Single screw support	31	31	L tot = Smax + A + B + 394
Double screw supports	86	86	L tot = Smax + A + B + 394

RediMount Flange Specifications

Parameter		Min	Max
Flange length (Lrm)	[mm]	81	143
Flange square (Srm)	[mm]	90	200
Flange weight *	[kg]	5,60	

* Max. weight including coupling and fastening screws

Performance Specifications

for Units with Double Standard Carriage (C)

Parameter		M100
Stroke length (Smax), maximum screw lead 5, 10 mm screw lead 25 mm	[mm]	 5228 4028
Total length (L tot), maximum screw lead 5, 10 mm screw lead 25 mm	[mm]	 5974 4774
Minimum distance between carriages (Lc)	[mm]	350
Dynamic load (Fy), maximum	[N]	4508
Dynamic load (Fz), maximum	[N]	4508
Dynamic load torque (My), maximum	[Nm]	Lc[1] × 2,254
Dynamic load torque (Mz), maximum	[Nm]	Lc[1] × 2,254
Force required to move second carriage	[N]	45
Weight of unit with zero stroke of carriages	[kg]	 21,34 7,00

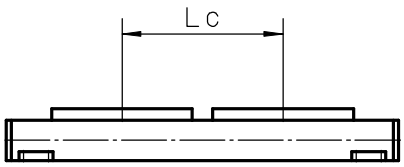

Screw support configuration	A [mm]	B [mm]	Total length (L tot) [mm]
No screw support	1	1	L tot = Smax + A + B + Lc + 394
Single screw support	31	31	L tot = Smax + A + B + Lc + 394
Double screw supports	86	86	L tot = Smax + A + B + Lc + 394

[1] Value in mm